Latches and D-Flip Flops

Submitted by:

Name	ID
Nawaf Alabdi	B00093759
Ali Abdelatief	B00099836

Submitted to:

Ms. Salsabeel Shapsough

Lab Instructor

American University of Sharjah

College of Engineering

Submitted on:

18/11/2024

Abstract

In this lab we will be building an S-R, and a D latch using the simple logic gates, and make use of a D flipflop 7474 IC chip

Introduction

In this lab, we will cover different latches and flipflops. We will start by implementing the active high SR latch using NOR gates and filling its truth table to verify its operation. Then we will work with the D latch and implementing it using NAND gates, and also coming with truth tables to verify its operation. Lastly, we will implement the D flip flop using the 7474 IC chip which takes in the input D, the clock, and the PRESET and CLEAR as direct inputs.

Theoretical Background

A latch is a sequential circuit, meaning the output is dependent on both Boolean variables as inputs and the circuit's current state "memory". It is asynchronous, meaning that it is pulse triggered, i.e. it stays active when the clock is on. Latches are a very simple version of computer memory, and there are two types. S-R and D latches.

An S-R latch, named after its input operations SET & RESET, stores one binary bit information in its output, and can be changed according to the input. When only SET is on, the output becomes 1, while when only the RESET input is on, the output becomes 0. Turning both input off keeps the output unchanged, meaning it keeps the value of whatever the last state was before turning off the inputs. Settings both SET and RESET to 1 yields to undefined behavior, which we usually try to avoid. The S-R latch is built by connecting two NOR gates to each other reserving one input for both R and S inputs.

When (S,R) = (1,0), the bottom NOR gates becomes ~(1 + NOR{R, !(Q-1)}) = 0, and ~Q = 0. The top NOR gate becomes ~(0 + 0) = 1 hence Q = 1.

The same logic applies for when (S,R) = (0,1).

As we can see, when both inputs are off, we have

Q = ~(~Q(t-1) + R) = Q(t-1) & ~(Q(t-1) +S) = ~Q(t-1)

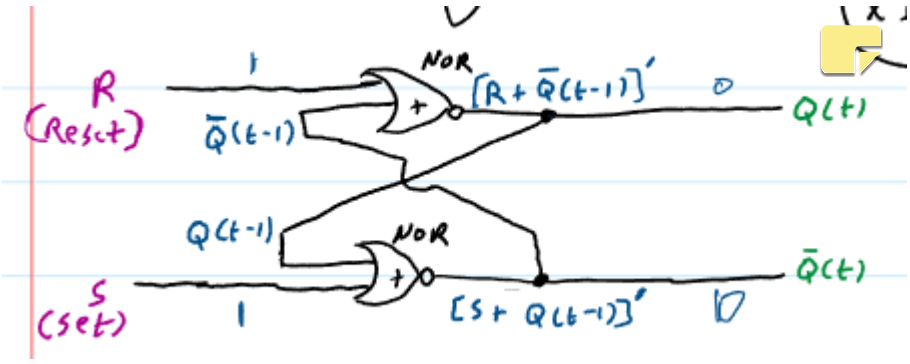

A D-latch has the same functionality as an S-R latch, except it has one input D that controls both S and R. When D = 0, Q is set to 0, and when D = 1, Q = 1. We build it by connecting a new pin D to both S-R inputs in an S-R latch, and inverting either the wire going to the R or the S, depending if we want active-high or active-low circuit.

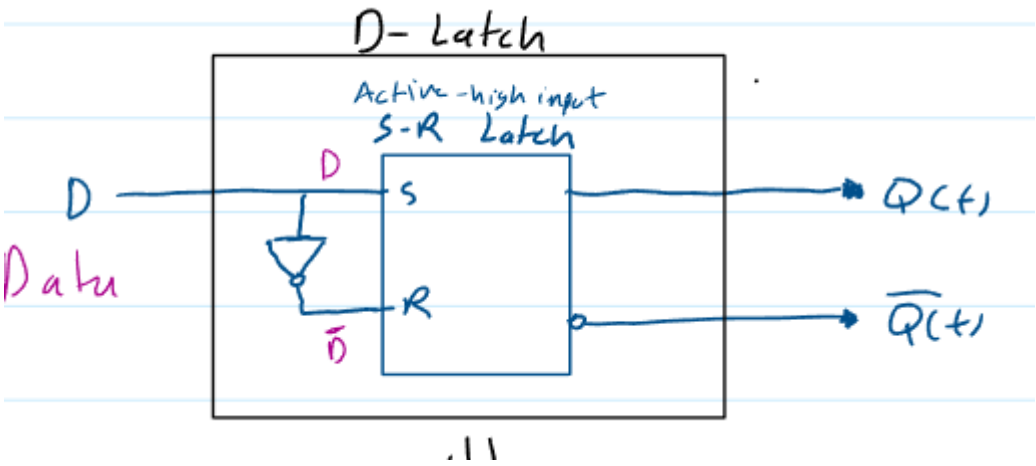

Flip flops are synchronous logic circuits, meaning they are edge triggered. They switch states only when the clock rises (if it is positive-edge) or when the clock lowers (if it is negative-edge). They are more stable compared to latches due to synchronous transitions.

D- flipflops work the same as D-latches, except they are edge-triggered. The changes on the output which reflect on the input of D only occur during the low to active transition period of the clock.

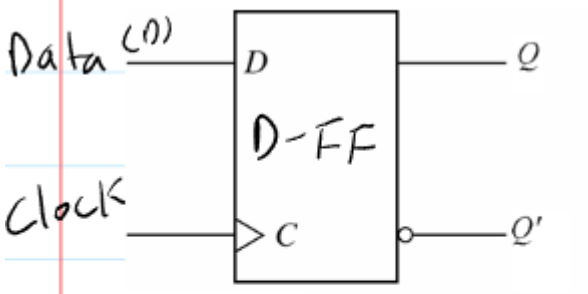

positive-edge, or
rising edge

- Have only two states:
  Set Q = 1 when D = 1.
  Reset Q = 0 when D = 0.

Characteristic table:

Rising Edge

Clock	D	Q(t+1)
↑	0	0 Reset
↑	1	1 Set

Characteristic equation:

$$Q(t+1) = D$$

Experimental work, Results and Discussion

Lab Assignments:

Exercise 1:

Connect the circuit of Fig(2.a) and verify its operation using discrete logic gates. Fill the following truth tables for both active-HIGH S-R latches.

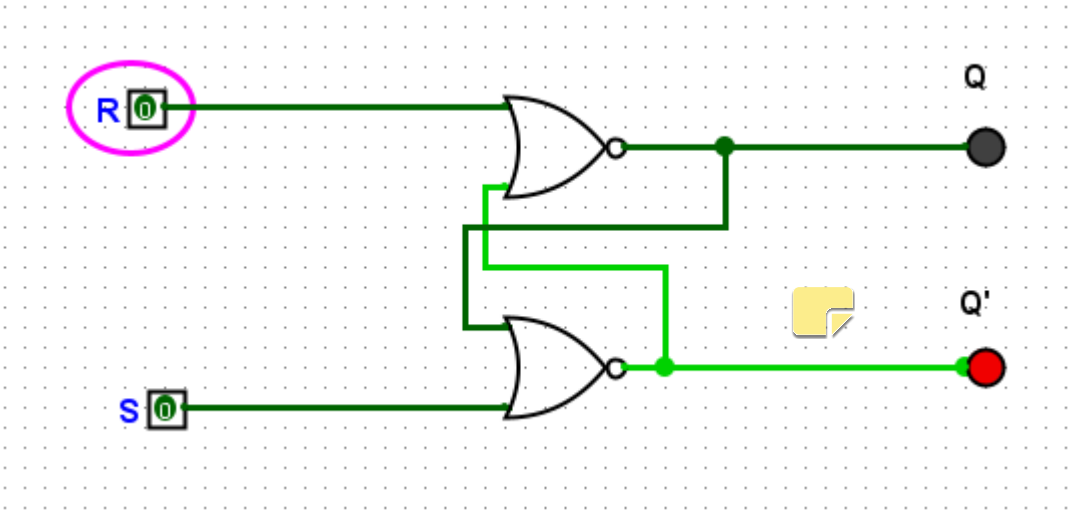

R	S	Q	Q’
0	0	Q	Q’
0	1	1	0
1	0	0	
1	1	?	?

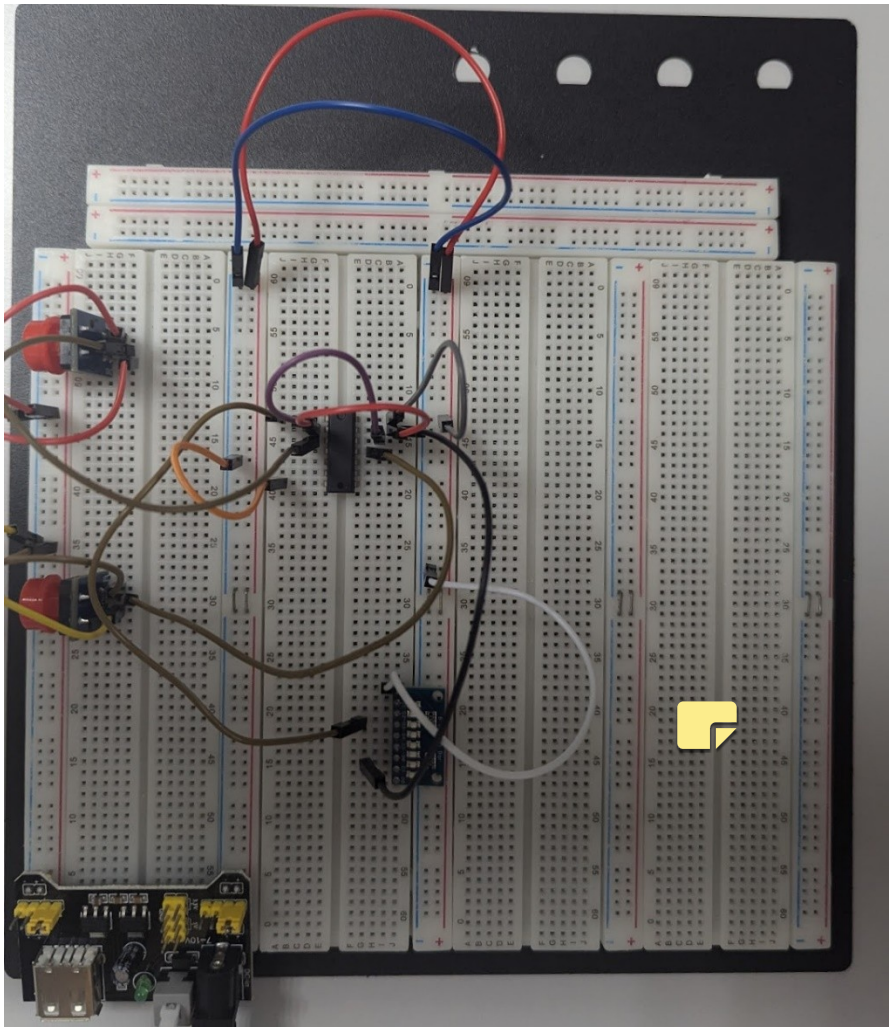

Exercise 2:

Connect the circuit of Fig(4) and verify its operation using discrete logic gates. Fill the following truth table below for the gated D-latch.

D	EN	Q	Q’
0	1	0	1
1	1	1	0
X	0	Q	Q’

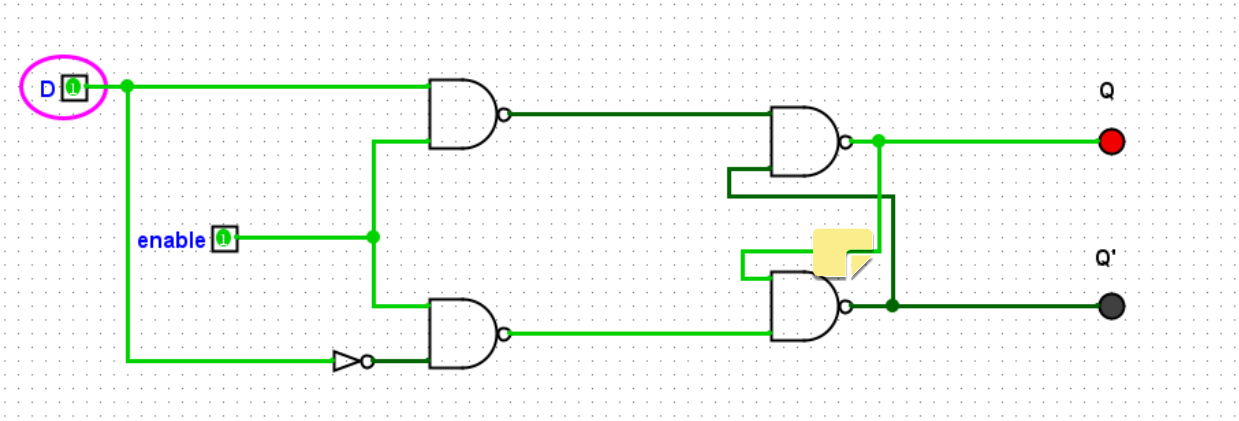
D
enable
Q
Q'

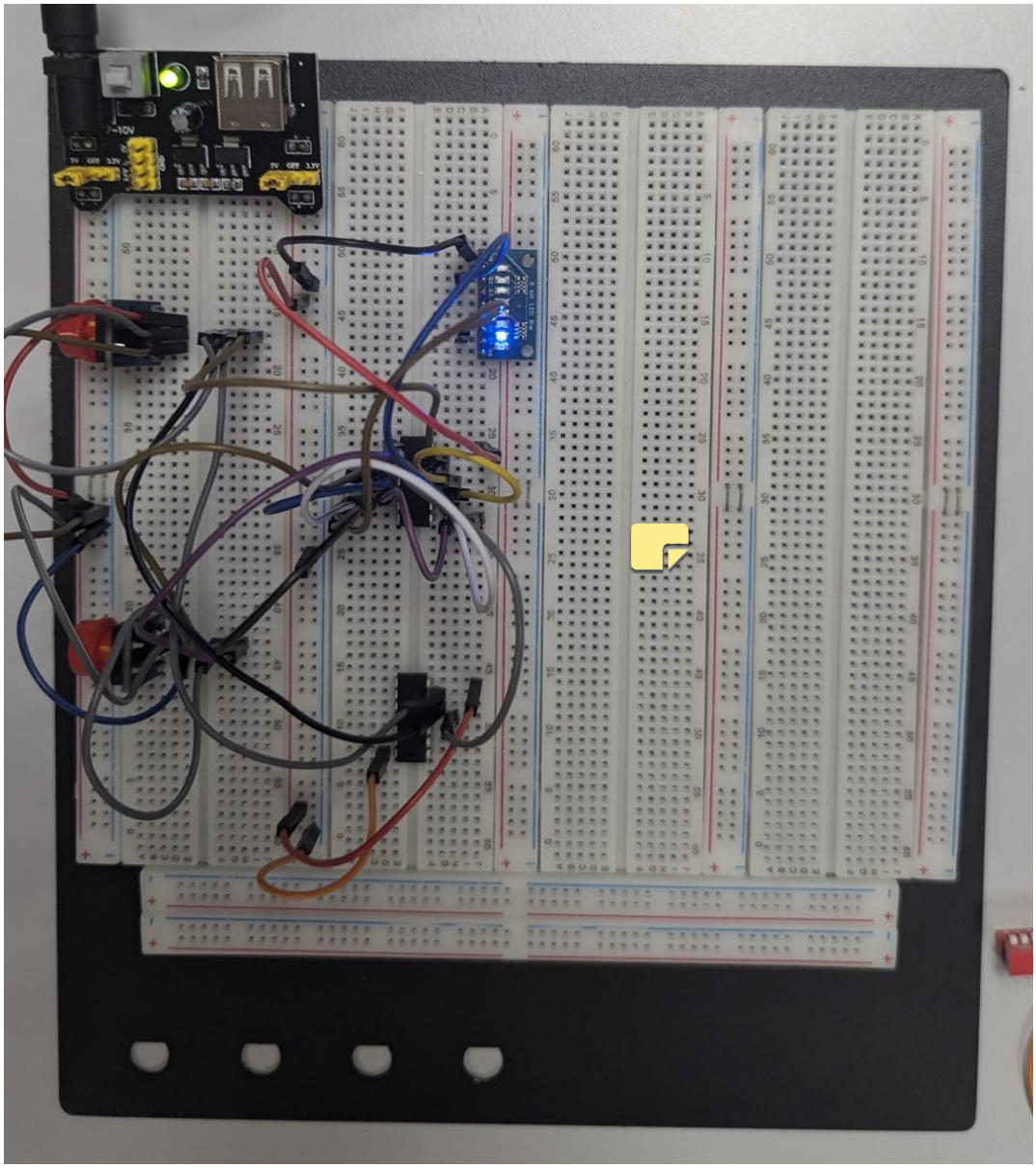

Exercise 3:

Implement and verify the operation of the D flip-flop (7474) on the Breadboard. Fill in the following table:

Inputs				Outputs	
PRE	*CLR*	*CLK*	*D*	*Q*	*Q*
L	L	X	X	?	?
L	H	X	X	1	0
H	L	X	X	0	1
H	H	↓	L	0	1
H	H	↓	H	1	0
H	H	H	X	Q	Q’

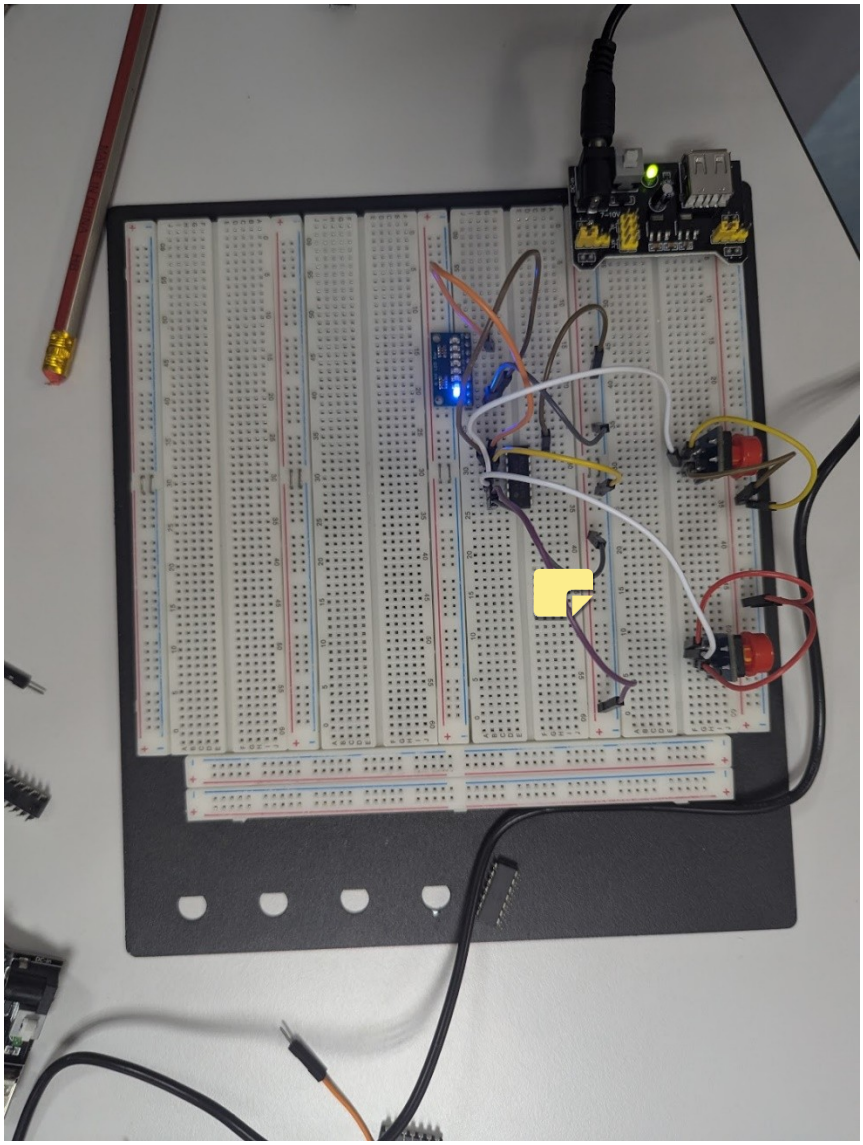

Conclusion

In this lab, we worked with SR and D latches, as well as D flip flops. We designed and implemented the SR and D latches using NOR and NAND gates respectively, and we used the 7474 IC chip to implement and use the D flip flop using direct inputs.